# DID 41 standard roller chain

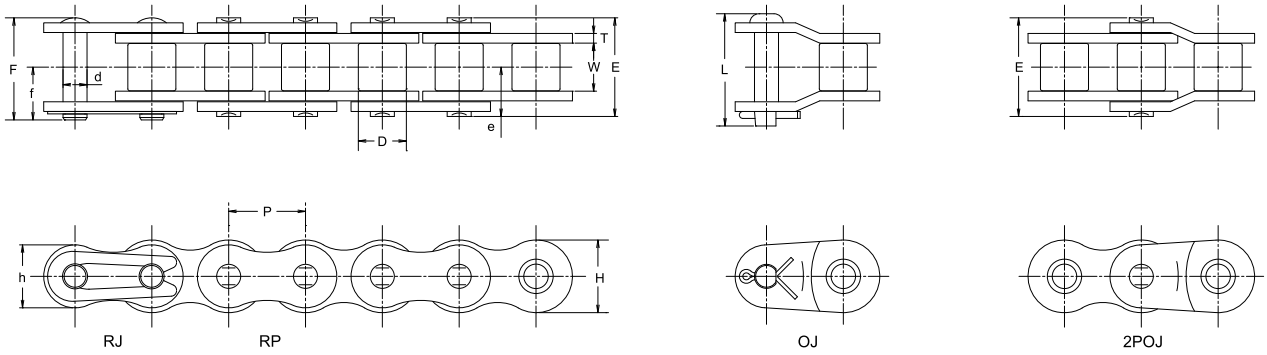


## Dimensions

Unit (mm)

| Chain No. DID | Chain No. JIS | Pitch P | Roller Link Width W | Roller dia. D | Pin d | Pin E | Pin F | Pin L | Pin e | Pin f | Plate T | Plate H | Plate h | JIS Min. Tensile Strength kN | JIS Min. Tensile Strength kgf | DID Min. Tensile Strength kN | DID Min. Tensile Strength kgf | DID Avg. Tensile Strength kN | DID Avg. Tensile Strength kgf | DID Max. Allowable Load kN | DID Max. Allowable Load kgf | Approx. Weight (kg/m) |
|---|---|---|---|---|---|---|---|---|---|---|---|---|---|---|---|---|---|---|---|---|---|---|
| DID 41 | 41 | 12.70 | 6.38 | 7.77 | 3.59 | 13.7 | 14.6 | 15.5 | 6.9 | 7.9 | 1.20 | 9.6 | 8.0 | 6.7 | 680 | 8.83 | 900 | 10.7 | 1,090 | 2.35 | 240 | 0.39 |

Note: The values of average tensile strength and Max. allowable tension are for chains.

## Max. Kilowatt Ratings DID 41

Unit (kW)

| Type of Lubrication / No. of Teeth of Small Sprocket | Small sprocket rpm (Refer to P132 for the details of lubrication A, B and C.) 50 | 200 | 400 | 600 | 900 | 1200 | 1800 | 2400 | 3000 | 3500 | 4000 | 4500 | 5000 | 5500 | 6000 | 6500 | 7000 | 7500 | 8000 |
|---|---|---|---|---|---|---|---|---|---|---|---|---|---|---|---|---|---|---|---|
| | A | | | B | | | | | | | | | C | | | | | | |
| 11 | 0.11 | 0.40 | 0.74 | 1.06 | 1.53 | 1.28 | 0.69 | 0.45 | 0.32 | 0.26 | 0.21 | 0.18 | 0.15 | 0.13 | 0.11 | 0.10 | 0.09 | 0.08 | 0.07 |
| 12 | 0.12 | 0.43 | 0.81 | 1.17 | 1.68 | 1.45 | 0.79 | 0.51 | 0.37 | 0.29 | 0.24 | 0.20 | 0.17 | 0.15 | 0.13 | 0.12 | 0.10 | 0.09 | 0.08 |
| 13 | 0.14 | 0.47 | 0.88 | 1.27 | 1.84 | 1.64 | 0.89 | 0.58 | 0.41 | 0.33 | 0.27 | 0.23 | 0.19 | 0.17 | 0.15 | 0.13 | 0.12 | 0.10 | 0.10 |
| 14 | 0.15 | 0.51 | 0.96 | 1.38 | 1.99 | 1.83 | 1.00 | 0.65 | 0.46 | 0.37 | 0.30 | 0.25 | 0.22 | 0.19 | 0.16 | 0.15 | 0.13 | 0.12 | 0.11 |
| 15 | 0.16 | 0.55 | 1.03 | 1.49 | 2.14 | 2.03 | 1.11 | 0.72 | 0.51 | 0.41 | 0.33 | 0.28 | 0.24 | 0.21 | 0.18 | 0.16 | 0.14 | 0.13 | — |
| 16 | 0.17 | 0.59 | 1.11 | 1.59 | 2.30 | 2.24 | 1.22 | 0.79 | 0.57 | 0.45 | 0.37 | 0.31 | 0.26 | 0.23 | 0.20 | 0.18 | 0.16 | 0.14 | — |
| 17 | 0.18 | 0.63 | 1.18 | 1.70 | 2.45 | 2.45 | 1.33 | 0.87 | 0.62 | 0.49 | 0.40 | 0.34 | 0.29 | 0.25 | 0.22 | 0.19 | 0.17 | 0.16 | — |
| 18 | 0.19 | 0.67 | 1.26 | 1.81 | 2.61 | 2.67 | 1.45 | 0.94 | 0.68 | 0.54 | 0.44 | 0.37 | 0.31 | 0.27 | 0.24 | 0.21 | 0.19 | 0.17 | — |
| 19 | 0.21 | 0.71 | 1.33 | 1.92 | 2.77 | 2.90 | 1.58 | 1.02 | 0.73 | 0.58 | 0.48 | 0.40 | 0.34 | 0.30 | 0.26 | 0.23 | 0.21 | 0.19 | — |
| 20 | 0.22 | 0.76 | 1.41 | 2.03 | 2.92 | 3.13 | 1.70 | 1.11 | 0.79 | 0.63 | 0.51 | 0.43 | 0.37 | 0.32 | 0.28 | 0.25 | 0.22 | 0.20 | — |
| 21 | 0.23 | 0.80 | 1.49 | 2.14 | 3.08 | 3.36 | 1.83 | 1.19 | 0.85 | 0.68 | 0.55 | 0.46 | 0.40 | 0.34 | 0.30 | 0.27 | 0.24 | 0.22 | — |
| 22 | 0.24 | 0.84 | 1.56 | 2.25 | 3.24 | 3.61 | 1.96 | 1.28 | 0.91 | 0.72 | 0.59 | 0.50 | 0.42 | 0.37 | 0.32 | 0.29 | 0.26 | — | — |
| 23 | 0.25 | 0.88 | 1.64 | 2.36 | 3.40 | 3.86 | 2.10 | 1.36 | 0.98 | 0.77 | 0.63 | 0.53 | 0.45 | 0.39 | 0.34 | 0.31 | 0.27 | — | — |
| 24 | 0.26 | 0.92 | 1.72 | 2.47 | 3.56 | 4.11 | 2.24 | 1.45 | 1.04 | 0.83 | 0.68 | 0.57 | 0.48 | 0.42 | 0.37 | 0.33 | 0.29 | — | — |
| 25 | 0.28 | 0.96 | 1.79 | 2.58 | 3.72 | 4.37 | 2.38 | 1.54 | 1.11 | 0.88 | 0.72 | 0.60 | 0.51 | 0.45 | 0.39 | 0.35 | — | — | — |
| 28 | 0.31 | 1.09 | 2.03 | 2.92 | 4.20 | 5.18 | 2.82 | 1.83 | 1.31 | 1.04 | 0.85 | 0.71 | 0.61 | 0.53 | 0.46 | 0.41 | — | — | — |
| 30 | 0.34 | 1.17 | 2.18 | 3.14 | 4.53 | 5.74 | 3.13 | 2.03 | 1.45 | 1.15 | 0.94 | 0.79 | 0.68 | 0.59 | 0.51 | — | — | — | — |
| 32 | 0.36 | 1.25 | 2.34 | 3.37 | 4.86 | 6.29 | 3.44 | 2.24 | 1.60 | 1.27 | 1.04 | 0.87 | 0.74 | 0.64 | 0.57 | — | — | — | — |
| 35 | 0.40 | 1.38 | 2.58 | 3.71 | 5.35 | 6.93 | 3.94 | 2.56 | 1.83 | 1.45 | 1.19 | 1.00 | 0.85 | 0.74 | — | — | — | — | — |
| 40 | 0.46 | 1.60 | 2.98 | 4.29 | 6.18 | 8.01 | 4.81 | 3.13 | 2.24 | 1.78 | 1.45 | 1.22 | 1.04 | — | — | — | — | — | — |
| 45 | 0.52 | 1.81 | 3.38 | 4.87 | 7.02 | 9.09 | 5.74 | 3.73 | 2.67 | 2.12 | 1.73 | 1.45 | — | — | — | — | — | — | — |